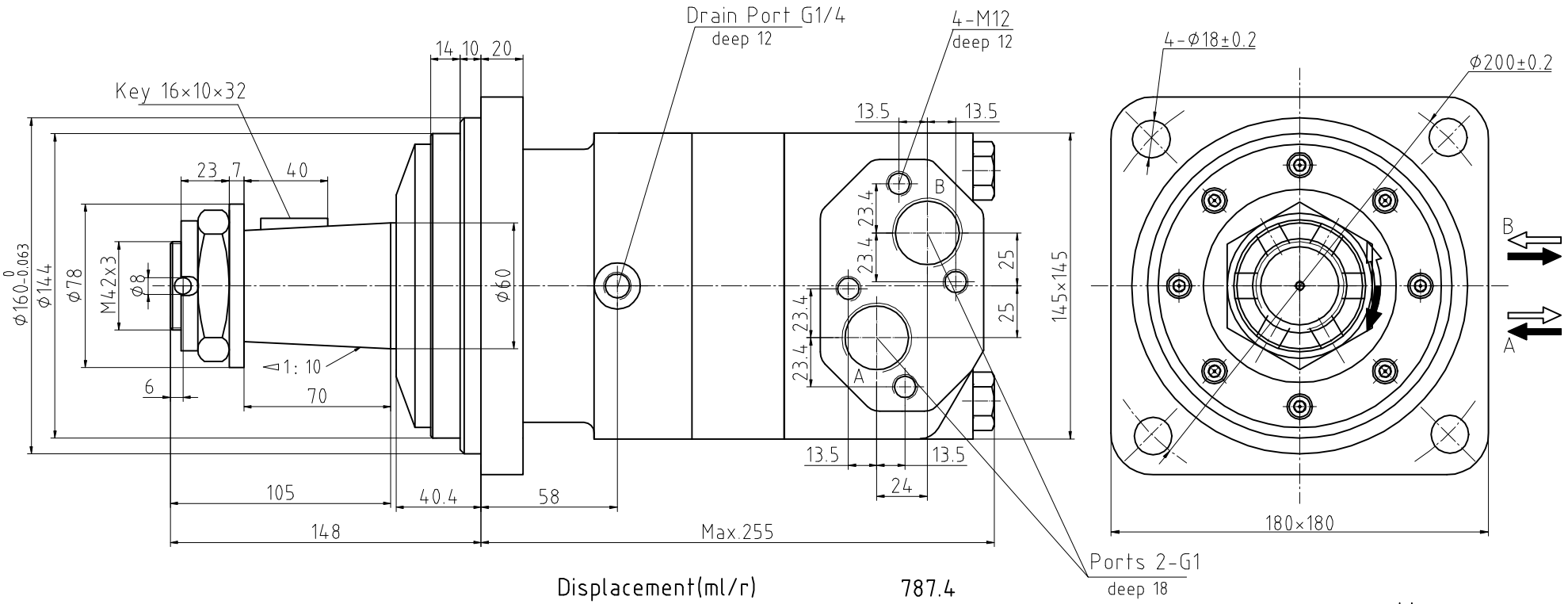

Displacement(ml/r)	787.4
Max.cont.Pressure drop(bar)	160
Max.cont.torque(N.m)	1773
Max.cont.flow(L/min)	150
Max.speed(r/min)	190
Max.OutPut.Power(Kw)	32

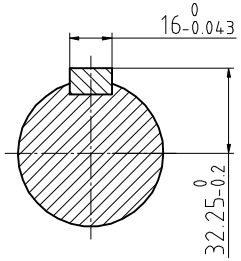

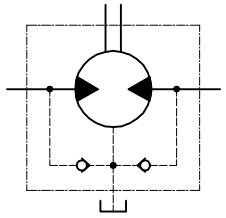

Rev.	Description	Date	2023/8/5
		DESIGNED BY	HGJ
		CHECK BY	WSH

THOTH

DESCRIPTION	BM5U-800ZAY/T7

Do not try to interpret the technical drawing, please contact us if you are in any doubt about it.

REPRODUCTION NOT PERMITTED ALL RIGHT RESERVED