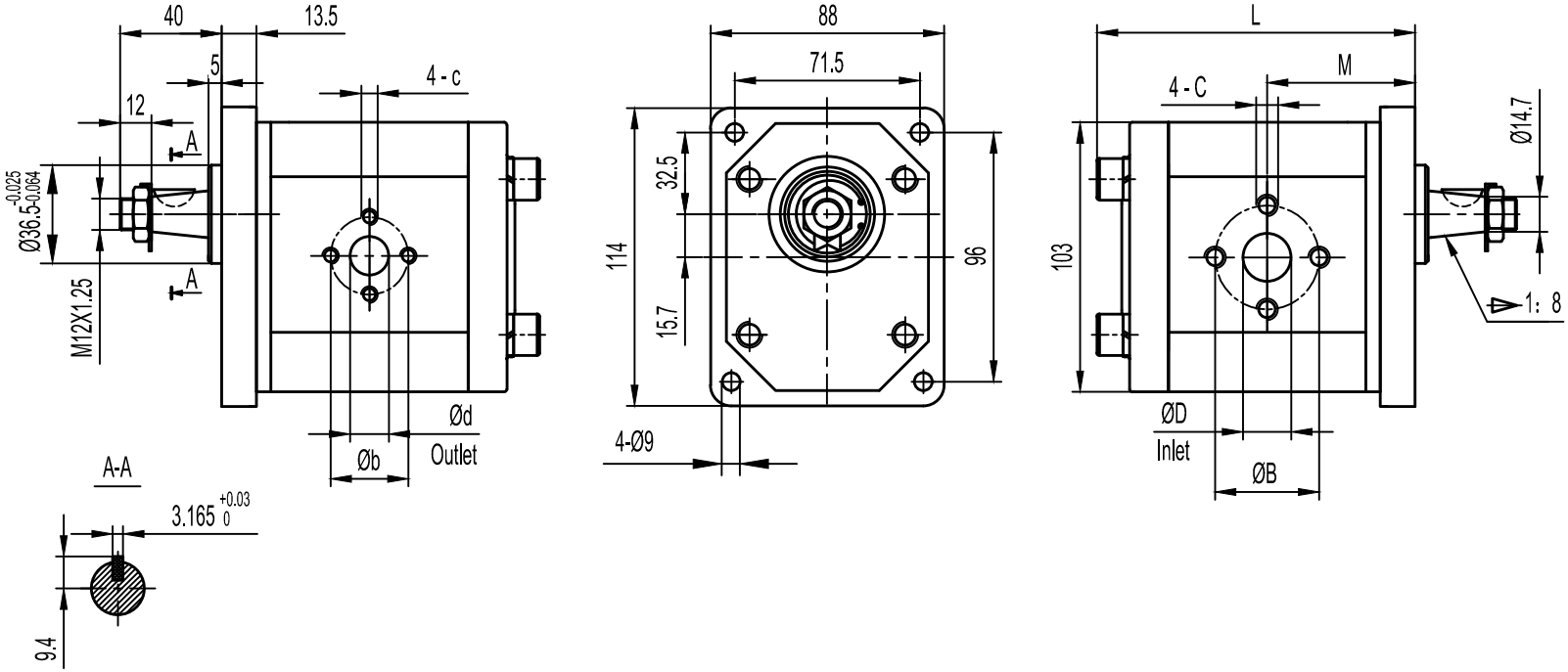

Specification

Model	disp. ml/r	P1	P2	P3	Min	Max	M	L	B	D	C	b	d	c	Direction
		Max Pressure(bar)			Speed(r/min)				Inlet			Outlet			
KGP2E2-D-30Z5F8	30	160	170	180	500	2500	65.8	140	40	19	M8	40	19	M8	Clockwise
KGP2E2-D-28Z5F8	28	180	190	200	500	2500	64.1	136	40	19	M8	40	19	M8	
KGP2E2-D-25Z5F8	25	200	215	230	500	3000	61.6	131	40	19	M8	40	19	M8	
KGP2E2-D-22Z5F9	22	200	225	250	500	3000	59.2	126.4	40	20	M8	30	13	M6	
KGP2E2-D-20Z5F9	20	200	225	250	500	3000	57.5	123	40	20	M8	30	13	M6	
KGP2E2-D-18Z5F9	18	200	225	250	500	3000	55.9	119.7	40	20	M8	30	13	M6	
KGP2E2-D-16Z5F9	16	200	225	250	600	3000	54.3	116.5	40	20	M8	30	13	M6	
KGP2E2-D-14Z5F9	14	200	225	250	600	3000	52.6	113	40	20	M8	30	13	M6	
KGP2E2-D-12Z5F9	12	200	225	250	600	3000	51	109.9	40	20	M8	30	13	M6	
KGP2E2-D-10Z5F9	10	200	225	250	600	3000	49.3	106.6	40	20	M8	30	13	M6	
KGP2E2-D-8Z5F2	8	200	225	250	800	3000	47.7	103.3	30	13	M6	30	13	M6	
KGP2E2-D-6Z5F2	6	200	225	250	800	3000	46	100	30	13	M6	30	13	M6	
KGP2E2-D-4Z5F2	4	200	225	250	800	3000	44.5	96.8	30	13	M6	30	13	M6	

									KRS
marker	quantity	section	rejigger name	underwrite	date				Outline Drawing
design			standard			phase marker	weight	scale	
collate									
Auditing									
technics			sanction			together sheet number			