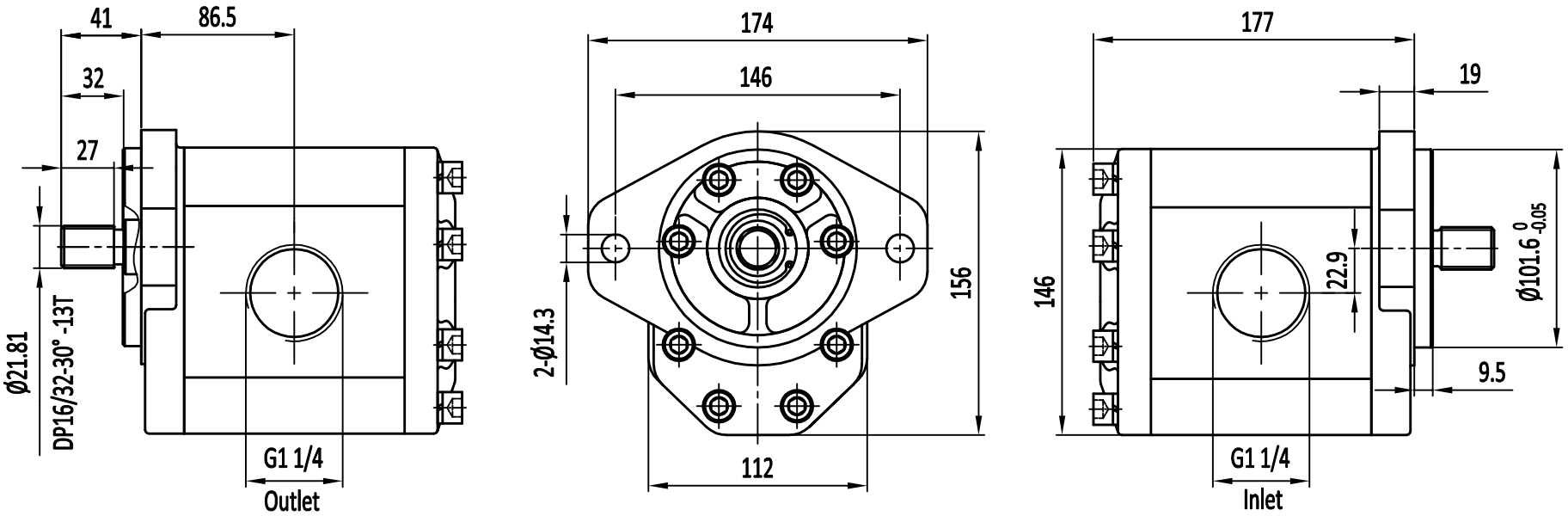

Specification

KGP3A8-D-71J17L11	71	180	200	220	600	2500	Clockwise
Model	disp. ml/r	P1	P2	P3	Min speed r/min	Max speed r/min	Direction
		Max pressure bar					

								KRS
marker	quantity	section	rejigger name	underwrite	date			Outline Drawing
design			standard			phase marker	weight	scale
collate								
Auditing								KGP3A8-D-71J17L11
technics			sanction			together sheet number		