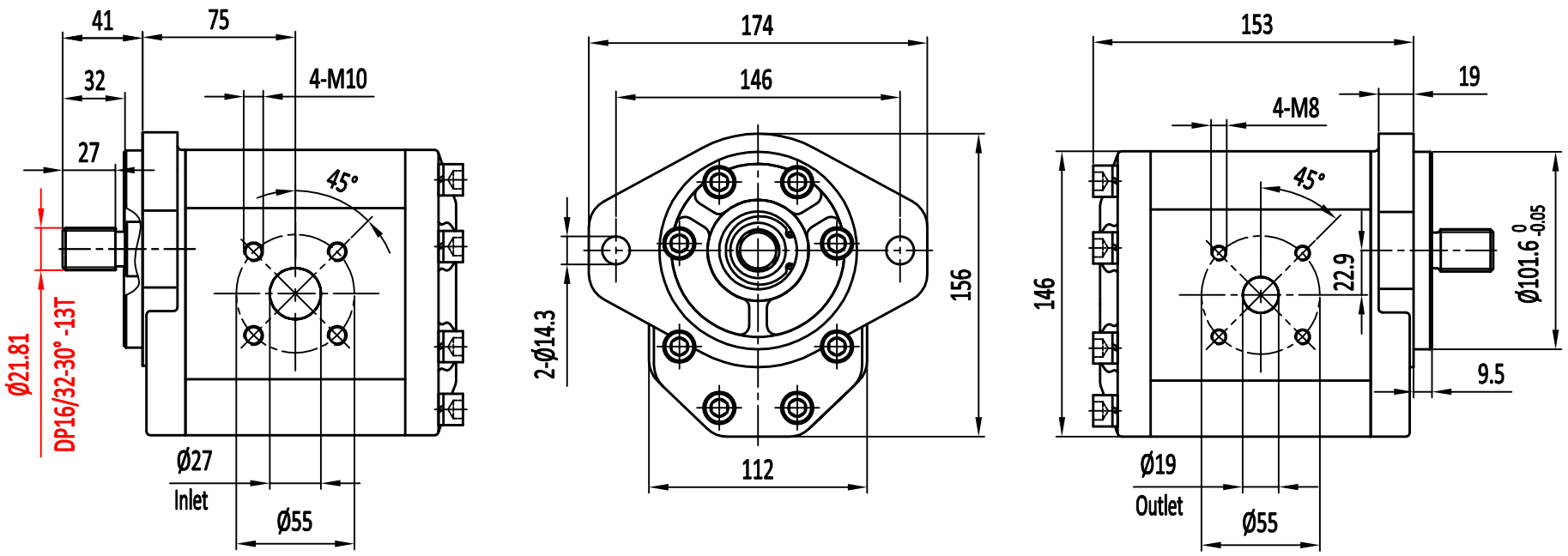

Specification

KGP3A8-S-46J17F90	46	200	225	250	500	3000	Anti-clockwise
Model	disp. ml/r	P1	P2	P3	Min speed r/min	Max speed r/min	Direction
		Max pressure bar					

									KRS
marker	quantity	section		rejigger name	underwrite	date			Outline Drawing
design				standard			phase marker	weight	scale
collate									
Auditing									
technics				sanction			together sheet number		