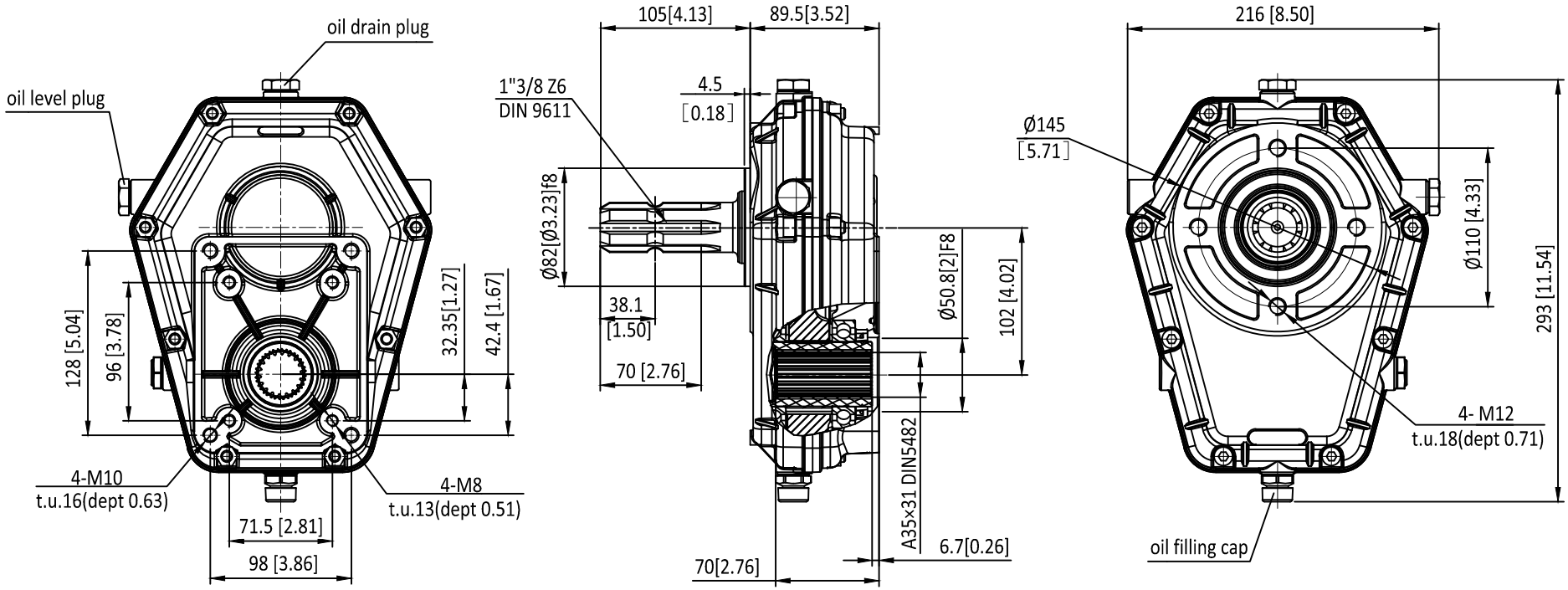

Specification

1. Transmission ratio of the gearbox is 1:3.8 ;
2. Good appearance, no obvious clash and other defects ;

								KRS
marker	quantity	section	rejigger name	underwrite	date			PTO Gearbox
design			standard			phase marker	weight	scale
collate								
Auditing								KM7001-6A
technics			sanction			together sheet number		