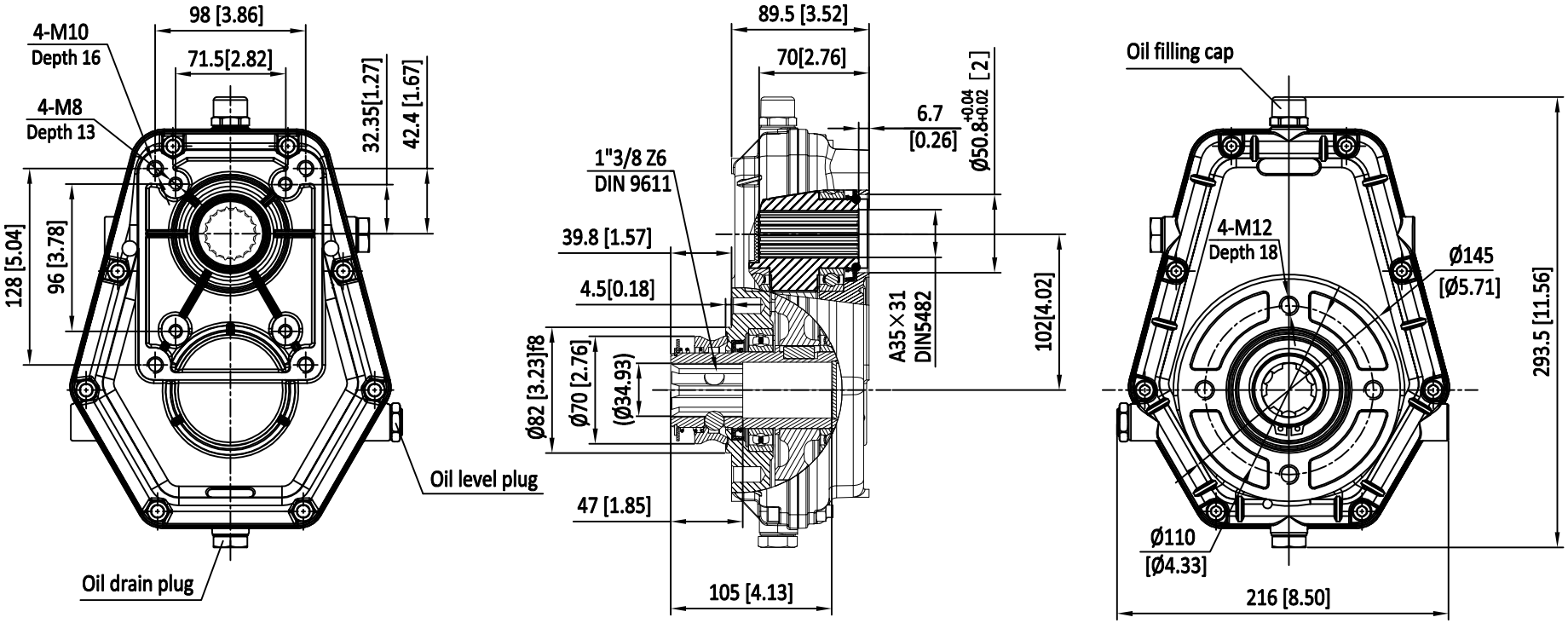

Specification

1. Transmission ratio of the gearbox is 1:3.8 ;
2. Good appearance, no obvious clash and other defects .

									KRS
marker	quantity	section	rejigger name	underwrite	date				PTO Gearbox
design			standard			phase marker	weight	scale	
collate							12.4KG		KM7004-6A
Auditing						together sheet number			
technics			sanction						